LITHIUM BATTERY SERVICE MANUAL

Supporting All Generation One Lithium Batteries

TABLE OF CONTENTS

Lithium Ion Battery (Lithium Iron Phosphate, LiFePO4) DANGER

Hazard statement

The materials contained in this product may only represent a hazard if the integrity of the cell or battery is compromised; physically, thermally, or electrically abused. The below are the hazards anticipated under those conditions:

Flammable liquid and vapor. Causes skin irritation. Causes serious eye irritation. Causes damage to organs (bone, teeth) through prolonged or repeated exposure.

Precautionary statement

Prevention

Keep away from heat/sparks/open flames/hot surfaces. - No smoking. Keep container tightly closed. Ground/bond container and receiving equipment. Use explosion-proof electrical/ventilating/lighting equipment. Use only non-sparking tools. Take precautionary measures against static discharge. Do not breathe dust. Do not eat, drink or smoke when using this product. Wear protective gloves/protective clothing/eye protection/face protection. Wash thoroughly after handling.

Response

In case of fire: Use appropriate media to extinguish. If on skin (or hair): Take off immediately all contaminated clothing. Rinse skin with water/shower. If skin irritation occurs: Get medical advice/attention. Take off contaminated clothing and wash it before reuse. If in eyes: Rinse cautiously with water for several minutes. Remove contact lenses, if present and easy to do. Continue rinsing. If eye irritation persists: Get medical advice/attention. Get medical advice/attention if you feel unwell.

Storage – Store in a well-ventilated place. Keep cool. Store as indicated in Section 7 of the SDS document.

Disposal – Dispose of contents/container in accordance with local/regional/national/international regulations.

Supplemental information

Presents a physical hazard which is not otherwise classified. Incorrect handling or storage of lithium Ion batteries may cause thermal runaway resulting in fire or explosion. Keep away from heat/sparks/open flames/hot surfaces. - No smoking. Under normal conditions of processing and use, exposure to the chemical constituents in this product is unlikely. The chemicals are contained in a sealed aluminum housing. Risk of exposure occurs only if the battery is mechanically, thermally or electrically abused. If this occurs, exposure to the electrolyte solution contained within can occur by Inhalation, Ingestion, eye contact and skin contact.

Additional Notes: CAUTION: Do not dispose in fire, mix with other battery types, charge above specified rate, connect improperly, or short circuit, which may result in overheating, explosion or leakage of cell contents. Do not open or disassemble. The liquid contained in the battery is flammable. Do not puncture, deform or incinerate.

This product is a "Hazardous Chemical" as defined by the OSHA Hazard Communication Standard, 29 CFR 1910.1200. Additional information is given in the Safety Data Sheet.

Emergency Number USA/Canada: CHEMTREC (800) 424-9300, Outside USA 1 (703) 527-3887

WARNING: This product can expose you to chemicals including Lead, which is known to the State of California to cause cancer and birth defects or other reproductive harm. For more information go to **www.P65Warnings.ca.gov.**

Batería de ion de litio (fosfato de litio y hierro, LiFePO4) PELIGRO

Indicación de Peligro

Los materiales contenidos en este producto solo pueden representar un peligro si la integridad de la celda o batería se ve comprometida; maltratada física, térmica o eléctricamente. Los siguientes son los peligros previstos bajo esas condiciones:

Líquido y vapor inflamables. Provoca irritación cutánea. Provoca irritación ocular grave. Provoca daños en los órganos (huesos, dientes) tras exposiciones prolongadas o repetidas.

Indicaciones preventivas

Prevención

Mantener alejado del calor, chispas, llamas abiertas y superficies calientes. No fumar. Mantener el recipiente bien cerrado. Unir/conectar a tierra el contenedor y el equipo de recepción. Utilizar equipos eléctricos/de ventilación/de iluminación a prueba de explosiones. Utilizar únicamente herramientas que no produzcan chispas. Tomar medidas de precaución contra las descargas estáticas. No respirar el polvo. No comer, beber ni fumar mientras se usa este producto. Usar guantes de protección/ropa protectora/protección para los ojos/protección facial. Lavarse bien después de manipularla.

Respuesta

En caso de incendio: utilizar los medios adecuados para la extinción. En caso de contacto con la piel (o el cabello): quitarse inmediatamente toda la ropa contaminada. Enjuagar la piel con agua o tomar una ducha. Si se produce irritación en la piel: Obtener asesoramiento/atención médica. Quitarse la ropa contaminada y lavarla antes de volver a usarla. Si es en los ojos: Enjuagar cuidadosamente con agua durante varios minutos. Retirar los lentes de contacto, si se llevan y es fácil hacerlo. Continuar enjuagando. Si persiste la irritación de los ojos: Obtener asesoramiento /atención médica. Buscar asesoramiento / atención médica si la persona no se siente bien.

ADVERTENCIA: Este producto puede exponerlo a sustancias químicas, incluido el plomo, que según el estado de California causa cáncer y malformaciones congénitas u otros daños reproductivos. Para obtener más información, visite **www.P65Warnings.ca.gov.**

Almacenamiento – Almacenar en un lugar bien ventilado. Conservar en frío. Almacenar como se indica en la Sección 7 de la hoja de datos de seguridad.

Eliminación – Eliminar el contenido/recipiente de acuerdo con las regulaciones locales / regionales / nacionales / internacionales.

Información complementaria

Presenta un peligro físico que no está clasificado de otra manera. Si las baterías de iones de litio se manipulan o almacenan de forma incorrecta, pueden provocar un desbordamiento térmico que provoque un incendio o una explosión. Mantener alejado del calor, chispas, llamas abiertas y superficies calientes. No fumar. Bajo condiciones normales de procesamiento y uso, la exposición a los componentes químicos de este producto es poco probable. Los productos químicos se encuentran en una carcasa de aluminio sellada. El riesgo de exposición ocurre solo si la batería sufre un maltrato mecánico, térmico o eléctrico. Si esto ocurre, la exposición a la solución de electrolitos contenida dentro puede ocurrir por inhalación, ingestión, contacto con los ojos y con la piel.

Notas Adicionales: PRECAUCIÓN: No arrojarla al fuego, no mezclarla con otros tipos de batería, no cargarla por encima de la velocidad especificada, no conectarla de forma incorrecta y evitar el riesgo de cortocircuito, lo cual puede provocar un sobrecalentamiento, una explosión o una fuga del contenido de la celda. No abrir ni desmontar. No perforar, deformar ni incinerar. El líquido que contiene la batería es inflamable. Mantenerla alejada del calor / chispas / llamas abiertas / superficies calientes. - No fumar.

Este producto es un "Químico Peligroso" según lo define la Norma de Comunicación de Peligros de OSHA, 29 CFR 1910.1200. Se proporciona información adicional en la Ficha de Datos de Seguridad.

Número de emergencia en EE.UU. / Canadá: CHEMTREC (800) 424-9300, Fuera de EE.UU. 1 (703) 527-3887

Li-ion

4-6362

Mfg. by / Mfg. por Navitas Systems, 5949 Jackson Rd, Ann Arbor, MI 48103 734-205-1400

1: INTRODUCTION

1:1 Training

This manual is meant to assist with Deka Ready Power troubleshooting and service. All topics covered in the following sections are taught in the Deka University DRP Technician class. It is recommended that DRP technicians participate in this class to receive a complete understanding of DRP operation, troubleshooting, and service of lithium batteries and their approved chargers. Work with you branch management to enroll in an upcoming class.

1.2 How to Use This Manual

For easier navigation, the digital version of this manual contains links to each section in the table of contents on page 2. Use these to quickly navigate to the desired section.

The symbols below are used throughout this manual to indicate important information.

NOTE: Indicates information that may affect product performance or actions that would void the product warranty.

CAUTION: ***Indicates information that involves operator safety or potential product damage.***

2: SAFETY

2.1 General

When used properly, the Deka Ready Power Li-ion motive power battery is a safe, dependable source of electrical power. However, the materials contained within this product may present a hazard or hazardous condition if the integrity of the cell or battery is compromised.

Only trained and QUALIFIED personnel should install, use, or service this equipment.

Consult the Safety Data Sheet (SDS) for additional precautions and first aid measures. The SDS can be obtained at www.dekareadypower.com

2.2 Elements of Concern

There are five main potential hazards when not used and maintained as designed in a Deka Ready Power Li-ion battery: electrolyte, off-gassing, arc flash and shock potential, and weight.

1. **Electrolyte:** The electrolyte in a Li-ion battery plays a key role in transporting the positive lithium ions between the cathode and anode. The most common electrolyte is comprised of lithium salt, such as LiPF6 (an organic solvent), containing ethylene carbonate, dimethyl carbonate, and diethyl carbonate. Electrolyte can be a safety hazard since it contains flammable solvents and if the Deka Ready Power is damaged or incorrectly charged, it may lead to explosion and fire. Electrolyte in the presence of water will also produce Hydrofluoric acid. Consult SDS for additional precautions and first aid measures.
2. **Off-Gassing:** Cells have one time use pressure relief vents to allow excessive pressure out. Excessive pressure is due to the breakdown of the electrolyte. This breakdown may produce an “organic” smell (similar to a permanent marker). Allow off-gassing to dissipate before servicing a battery and contact the local Deka Representative for further guidance.
3. **Electricity:** An electric shock hazard exists for persons who contact live parts of batteries when the voltage is over 60 volts DC. The higher the voltage, the greater the electric shock hazard. Do not touch battery terminals while the Deka Ready Power is operating.
4. **Arc Flash:** The light and heat produced as part of an **arc fault**, a type of electrical explosion or discharge that results from a connection through air to ground or another voltage phase in an electrical system. Be sure to consult a hazard category classification table, like that found in NFPA 70E. Table 130.7(C)(15)(a) lists a number of typical electrical tasks by various voltage levels and recommends the category of PPE that should be worn. The second method of selecting PPE is to perform an arc flash hazard calculation to determine the available incident arc energy. An industry manual from the Institute of Electrical and Electronical Engineers (IEEE) labeled IEEE 1584 provides a guide to perform calculations given the maximum fault current, duration of faults, and other general equipment information is known. Once the incident energy is calculated, the appropriate Personal Protective Equipment (PPE) can be selected. Only personnel trained in NFPA 70E and the Deka Ready Power should service the Deka Ready Power.
5. **Weight:** The average lift truck battery weighs more than 2,000 lbs. (900kg). It can cause serious injury if it isn’t handled carefully during installation, removal, and transport. Always use proper lifting equipment and techniques.

2.3 Proper PPE, Tool, and Equipment

1. **Wearing Protective Clothing:** Technicians working on or near Deka Ready Power batteries should always wear proper protective clothes including safety glasses, gloves, and safety toed shoes. Remove all metal jewelry to prevent an electric shock. Consult with the National Electrical Code (NEC), National Fire Protection Association (NFPA) NFPA 70E, and local codes when working with exposed and/or energized electrical conductors.
2. **Lifting Batteries:** Always use the proper lifting equipment to reduce the risk of tray damage, shorting and possible injury. An insulated battery lifting beam of the proper weight capacity rating with an overhead hoist is the safest way to move a battery. An insulated lifting beam, with hooks that fit properly into the lifting ears in the tray, can be used with almost any type of overhead hoist. Be sure the lifting hooks align perfectly with the battery lifting ears. Misaligned hooks can cause battery lifting ear damage and could disengage while the battery is being lifted.
3. **Using the Battery as a Counterweight:** For most lift trucks to operate safely, the battery is part of the counterweight system of the forklift truck. The battery must be within the recommended battery weight range specified on the forklift truck’s nameplate. The battery’s service weight is noted on the ID label affixed to the battery counterweight (refer to section 5.8.2). A battery that is too heavy or too light can change the truck’s center of gravity and cause it to be unstable. It is the user’s responsibility to be sure the battery is within weight specifications of the forklift truck.
4. **Charging Areas – Proper Equipment:** The Deka Ready Power should be charged using only approved charging equipment in designated charging areas.
5. **Fire Fighting Equipment:** Hand-operated fire extinguishers should be available in all charging areas even if the areas are equipped with automatic sprinkler systems. For information on extinguisher class, size, and mounting locations, consult local fire authorities and your insurance carrier.
6. **Disconnecting Charger:** Always press the “Stop” button on the charger prior to disconnecting a battery that is being charged. Not using the “Stop” button will damage the battery and charger receptacles.

2.4 Electrolyte Exposure

If the Deka Ready Power battery pack case is crushed, damaged, or compromised, inadvertent contact with the electrolyte may occur. This can cause damage to eyes, skin, nose, throat, lungs, and respiratory tract if inhaled. Be sure to review the SDS before handling.

1. **Electrolyte Spills:** Spills are unlikely as the battery is enclosed in a steel case and the electrolyte is absorbed onto a substrate and cannot flow under normal conditions. However, if the battery is crushed, or compromised with a release of electrolyte, the electrolyte should be contained and absorbed with suitable materials (e.g., sand and/or vermiculite): the appropriate PPE shall be worn.
2. **Contact w/skin:** If any materials from inside the cell contact skin, immediately wash exposed area with plenty of water for at least 15 minutes. Remove any contaminated clothing, jewelry etc. If Calgonate is available, use as directed. Calgonate Gel is an effective topical 2.5% calcium gluconate gel that is used in first aid response to hydrofluoric acid (HF) exposure or contact to the body. Contact emergency services if needed.
3. **Eyes:** If contact with eyes, rinse with water for several minutes. Remove contact lenses, continue rinsing. Contact emergency services if needed.
4. **Inhaled:** Remove person to fresh air and keep comfortable for breathing. Contact emergency services if needed.

3: SERVICE

3.1 Overview

Maintenance of this product should only be performed by trained and qualified individuals. Failing to follow set instructions may result in personal injury or damage to the product.

Fully read and understand the process before conducting any trouble-shooting or service on a Deka Ready Power lithium battery or accessory. Contact a member of the Navitas service team if you have any questions about any of the processes listed below.

Support@navitassys.com 734-205-1402

3.2 TOOLS & EQUIPMENT REQUIRED

Insulated tools are required when working on Deka Ready Power batteries.

Below is a list of common tools needed to troubleshoot and service a Deka Ready Power lithium battery:

- 19mm insulated socket
- 17mm insulated socket if working on a 48v 1050ah
- 13mm insulated socket
- 10mm insulated socket
- 8mm insulated socket
- 3/8” insulated socket
- 4mm hex key if working on a 48v 1050ah
- 3mm hex key if working on a 48v 1050ah
- 15mm open ended wrench
- Insulated socket extension
- Insulated socket driver
- Insulated screwdriver set
- Hex key set
- Multimeter with voltage and continuity reading
- Windows based laptop
- PCAN Tool (Part Number 01-135-0008)
- PCAN Interface Harness (Part Number 03-920-0456)

3.3 Quick Reference Torque Values

Processes in the following service sections will call out the need to torque hardware to proper spec. Use this section to quickly identify the proper tool and torque values for all serviceable hardware. Match color on the diagram to the corresponding color on the chart.

NOTE: Failure to follow the proper torque spec may result in immediate damage to parts if over torqued or eventual loosening and battery in-operation if under torqued.

NOTE: External terminal nuts, and internal busbar nuts both require a 19mm wrench to install and remove, however they have a different thread size and pitch. During service, be sure to use the proper nut to prevent damage to threads or hardware seizing in place. Partial hand thread these nuts before using tools to bring to final torque.

3.3.1 External Torque Values – All batteries (except 48v 1050ah)

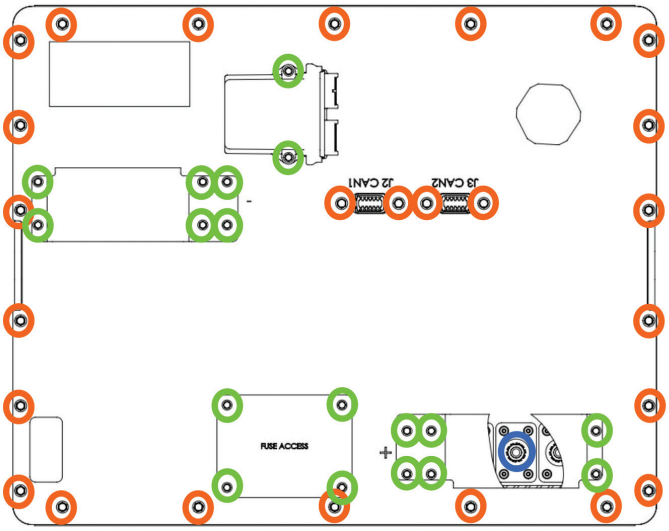

Battery Lid

External Torque Specs. - All Batteries (Except 48v 1050Ah)				
Hardware Size	Where Used	Tool Size	Torque (Metric)	Torque (SAE)
1/2"-13	POS & NEG terminals	19mm	40 Nm	29.5 ft-lb
M6 x 1 mm	Battery lid, CAN 1 & 2 ports	10mm	5 Nm	3.7 ft-lb
M5 x 0.8 mm	Fuse access cover, terminal and access covers (if equipped)	8mm	5 Nm	3.7 ft-lb 44 in-lb

3.3.2 Internal Torque Values – All Batteries (except 48v 1050ah)

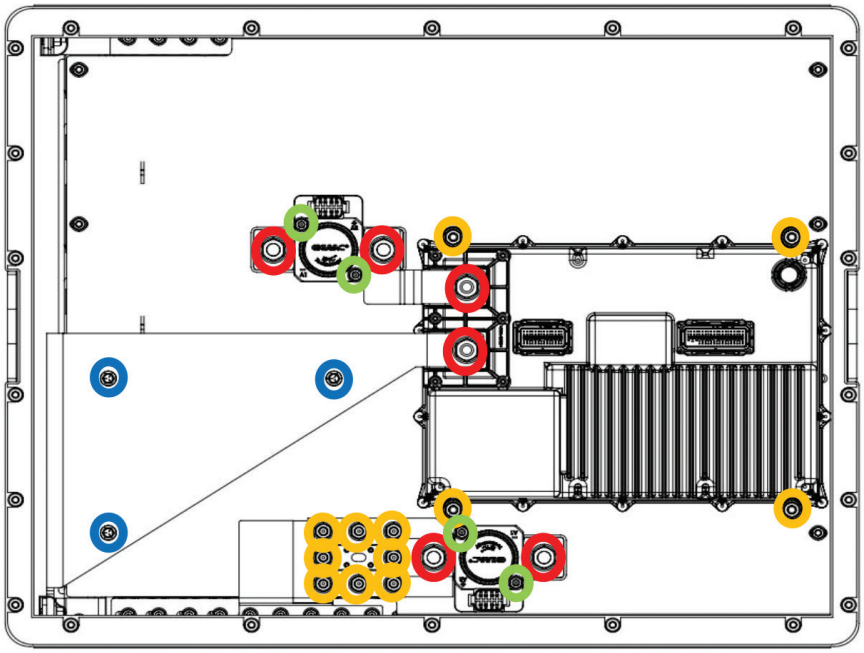

2 Contractor Battery

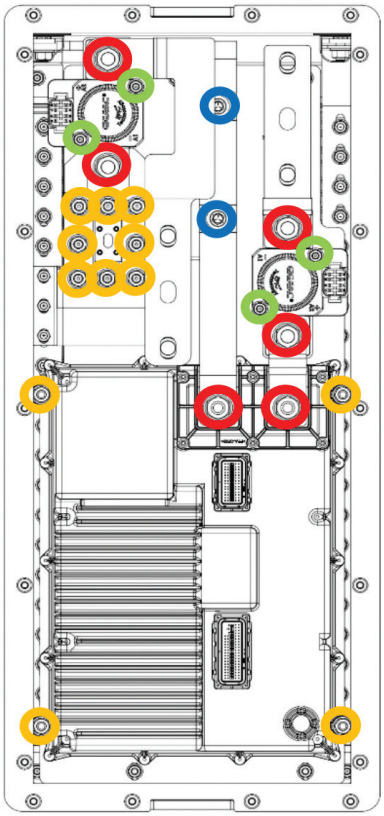

24v Battery

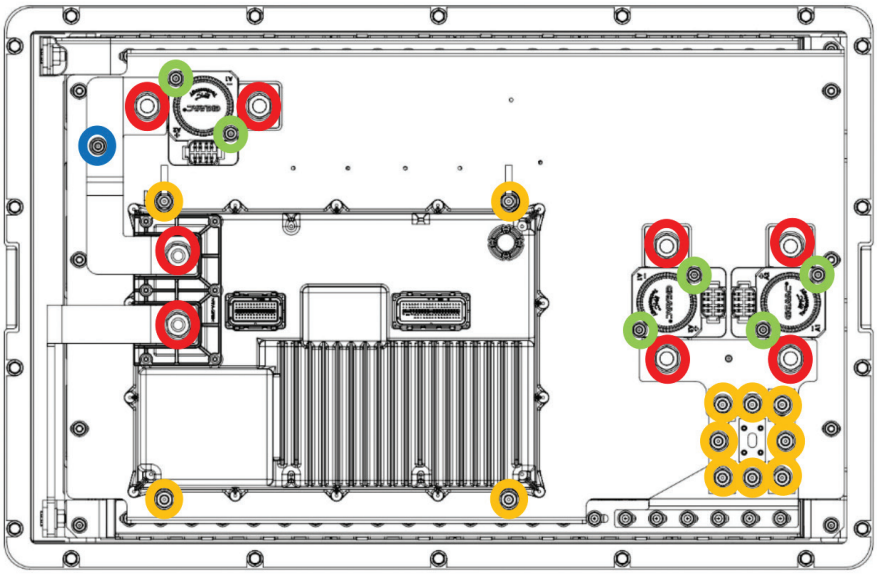

3 Contractor Battery

Internal Torque Specs. - All Batteries (Except 48v 1050Ah)				
Hardware Size	Where Used	Tool Size	Torque (Metric)	Torque (SAE)
M12 x 1.75 mm	Busbars to BMS / contactors	19 mm	32 Nm	23.5 ft-lb
M8 x 1.25 mm	BMS to tray, fuse components	13 mm	15 Nm	11.0 ft-lb
M6 x 1 mm	Contactors to tray	10 mm	13 Nm	9.5 ft-lb
1/4"-20	NEG busbar to tray	3/8 in	5 Nm	3.7 ft-lb 44 in-lb

3.3.3 Internal / External Torque Values – 48v 1050ah

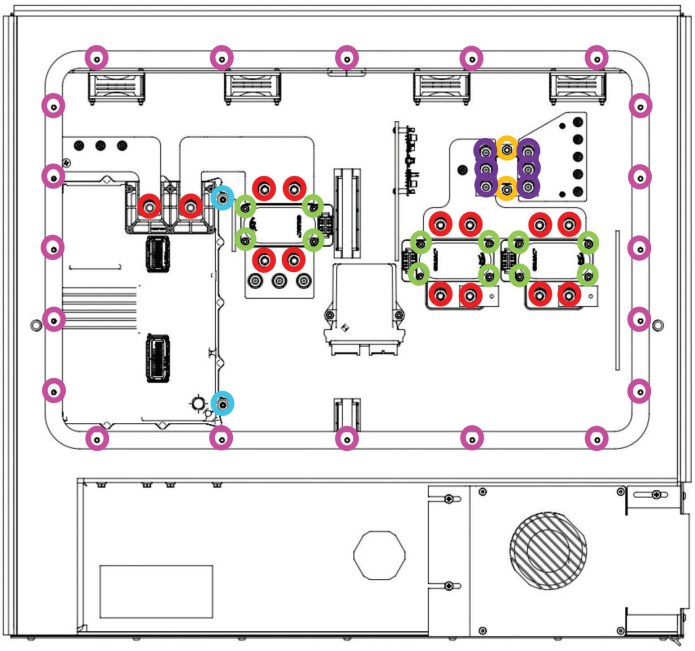

48v 1050ah Battery

Internal / External Torque Specs. - 48v 1050Ah				
Hardware Size	Where Used	Tool Size	Torque (Metric)	Torque (SAE)
M12 x 1.75 mm	Busbars to BMS / contactors	19 mm	32 Nm	23.5 ft-lb
M10 x 1.5 mm	Fuse, outer nuts on fuse block	17 mm	30 Nm	22 Nm
M8 x 1.25 mm	Center nuts on fuse block	13 mm	15 Nm	11.0 ft-lb
M6 x 1 mm	Contactor to tray	10 mm	13 Nm	9.5 ft-lb
M5 x 0.8 mm	BMS to tray	4 mm (hex key)	3 Nm	2.2 ft-lb 26.5 in-lb
M5 x 0.8 mm	Battery lid	3 mm (hex key)	5 Nm	3.7 ft-lb 44 in-lb

3.4 External Components & Accessories – Removal / Replacement

3.4.1 External Component Overview

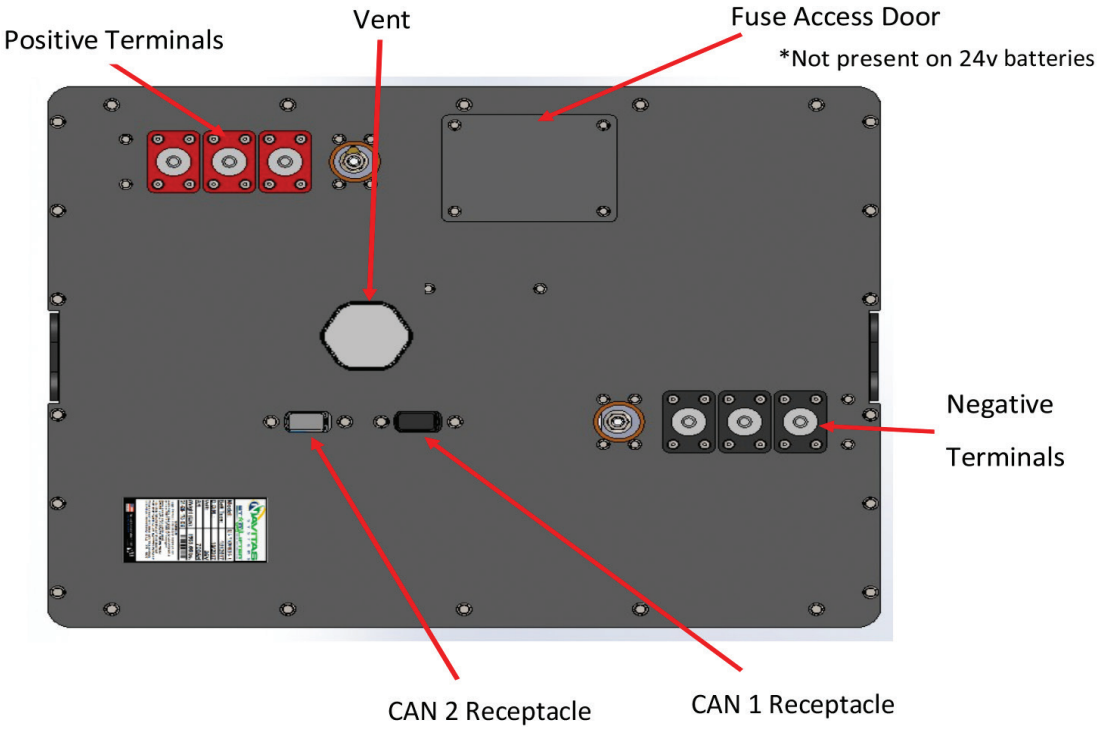

3.4.2 Counterweight Lid

The battery's counterweight may have been shipped with a lid to protect the external cables from damage. This lid will need to be removed to allow for maintenance on the cables or internal parts.

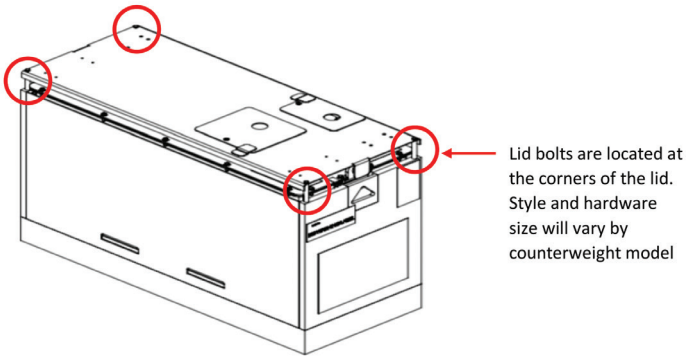

Removal of the counterweight lid:

1. Ensure the battery is powered off.
2. Remove mounting hardware located on each of the corners of the counterweight (example picture below).
3. If the counterweight has DC connector(s) and/or a Battery Discharge indicator (BDI) mounted to the lid, you may choose to remove these before lifting the counterweight lid off. This will make the lid lighter and prevent damaging cables.
4. Lift the lid from the counterweight, being careful not to snag any of the external cables with the lid mounting hardware.

Reinstallation of counterweight lid:

1. Visually inspect that all cables are routed in such a way as to not interfere with the lid reattachment.
2. Set lid back onto counterweight. Be sure to align the swinging access door over top of the battery communications receptacles.
3. Reinstall lid mounting hardware and tighten snug. There is no need to over-tighten hardware
4. If applicable, re-install DC cable connector(s) and/or BDI to counterweight lid. Ensure and original spacers for DC connectors are reinstalled between counterweight lid and connector to allow for proper charger connection.

3.4.3 User Interface Module (UIM)

Removal of the User Interface Module:

1. Ensure the battery is powered off.
2. Disconnect the battery communication cable from the CAN 1 receptacle on the battery lid. Grasping the black connector by the narrow ends, press firmly on the locking tabs while pulling the connector away from the lid.

CAUTION: **DO NOT** pull the connector by the wires as this may damage the cable.

3. Remove the opposite end from the UIM by unscrewing the connector retaining ring and pulling the connector away from the UIM box.
4. If the UIM is equipped with a truck communication cable, disconnect the truck side end by pressing firmly on the single gray locking tab and pulling away from the truck harness.

CAUTION: Grasp both harnesses by their plastic connectors and not by the wires, to prevent damage to either harness.

5. Remove the truck communication cable from the UIM by unscrewing the connector retaining ring and pulling the connector away from the UIM box.

Reinstallation of the User Interface Module:

1. Follow removal steps in reverse.
2. Line up the 12-pin connector with the receptacle on battery lid so that the alignment 'keys' match.

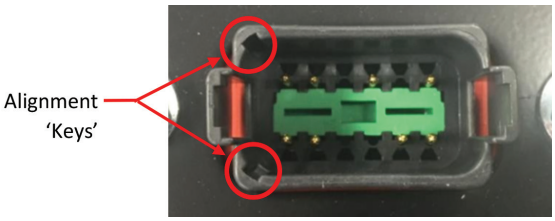

CAUTION: Forcing the connector into the receptacle incorrectly can cause damage to the battery and/or accessory. Always ensure proper alignment 'key' orientation before seating connector into receptacle.

3. Listen for clicks from the connectors, signifying the tabs have been fully seated.

3.4.4 Battery Cables & Connectors (Charge Cables)

The battery charge cable is used to connect with compatible chargers and can be used to power fork trucks with a compatible connector or jumper cable. The battery charge should be inspected frequently and replaced when signs of wear or damage are present.

Removal of the Battery Cables:

1. Ensure the battery is powered off. Verify by measuring for voltage at the cable ends. No voltage should be read.
2. If applicable, uninstall charge cable connector(s) from counterweight lid.
3. Remove counterweight lid.
4. Disconnect the data cable connector from the battery. This may be connected to the BMID, an accessory harness, or directly into the receptacles on the battery lid.
5. Remove battery terminal covers. If they are the metal style, be careful not to drop any hardware into battery lid holes exposed when cover is removed.
6. Remove terminal nuts holding down the cable needing to be replaced. **DO NOT** allow nuts to fall into contactor nut access hole.
7. Remove battery cable from terminal posts.
8. If the battery is to remain in this state for an extended time, reinstall terminal covers to prevent foreign objects from entering the battery through the exposed access holes. This only applies to batteries using metal terminal covers.

Reinstallation of the Battery Cables:

1. Follow removal instructions in reverse.
2. Torque all terminal nuts to spec.
3. Reinstall all terminal covers and torque hardware to spec. (if using metal covers).
4. Reconnect the data cable connector to battery how it was previously. Ensure all alignment 'keys' are oriented correctly, and connectors are fully seated. Loose or incorrect connection may prevent proper charging.
5. If applicable, reinstall cable connector(s) to counterweight lid. Be sure to use any connector spacers that were originally supplied.
6. Reattach the counterweight lid.

3.4.5 Battery Cables Other Than Charge Cables (Truck Power)

Your application may use a SB, A320 or SBX cable for dedicated truck power. These cables are similar to charge cables with the exceptions that they are rarely mounted to the counterweight and have no data cables to connect to the battery.

Removal of the Battery Cables:

Follow the steps outlined in above in "Battery Cables & Connectors (Charge Cables) Removal", with the exceptions that you won't have a counterweight bracket or data cable to remove.

Installation of the Battery Cables:

Follow "Battery Cables & Connectors (Charge Cables) Install". Disregard the data cable and counterweight bracket installation.

3.4.6 Battery Monitor Identification (BMID)

The BMID is used to aid in the communication between the battery and charger. Note that this is only on 1.0 and 1.25 BMS batteries, and 1.4 do not require them since they have an integrated BMID within the BMS.

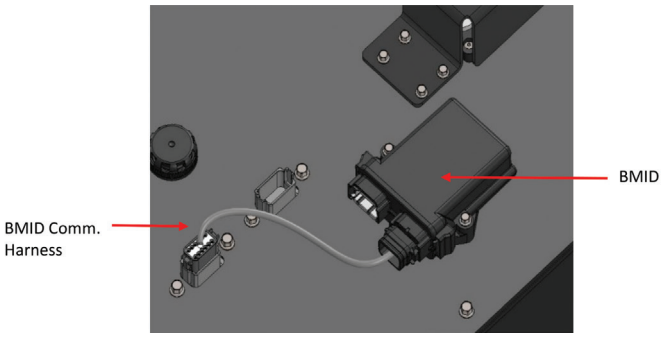

Removal of the BMID:

1. Ensure the battery is turned off.
2. Disconnect the two communication cables connected to the BMID by firmly pressing in on the tabs and pulling the connectors away from the module. **DO NOT** pull by the wires or damage may occur.
3. Remove the two screws holding the module to the battery lid.

Installation of the BMID:

1. Follow removal steps in reverse.
2. Install and torque the mounting screws to spec. **DO NOT** overtighten or damage to threads may occur.

3.4.7 Battery Monitor Identification (BMID) Harness

The BMID cable is used to aid in the communication between the battery and charger.

Removal of BMID harness:

1. Ensure the battery is turned off.
2. Grasp the gray connector by the narrow ends, press firmly on the tabs while pulling away from the battery lid. **DO NOT** pull connector by the wires. This will cause cable damage and may result in the product not working as expected.
3. Repeat process for opposite end of the cable.

Reinstallation of BMID harness:

1. Follow removal steps in reverse.
2. Listen for clicks from the connectors, signifying the tabs have been fully seated. Loose connections can cause intermittent communication issues and cause the battery to fault or affect the ability to charge properly.

3.5 Internal Components Replacement

3.5.1 Internal Components Overview

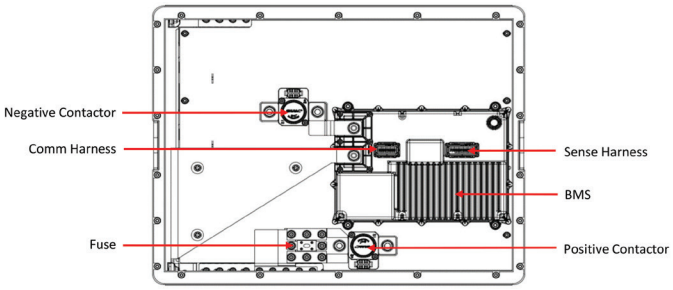

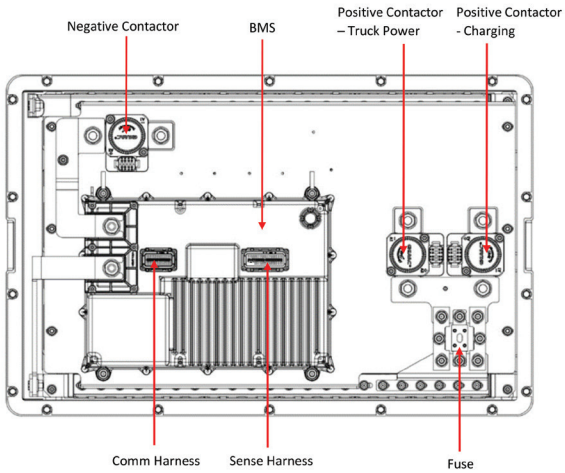

3.5.2 Fuse

The Deka Ready Power Battery is current protected by an internal fuse. On most battery models, the fuse is accessible through the fuse access door on top of the battery lid. For models not equipped with the access door, follow battery lid removal instructions to gain access to the fuse.

Depending on battery model, one of two types of fuses (barrel or flat) will be utilized. Both fuse types are installed similarly and employ fuse spacers to secure the assembly. See pictures below for examples of each fuse type.

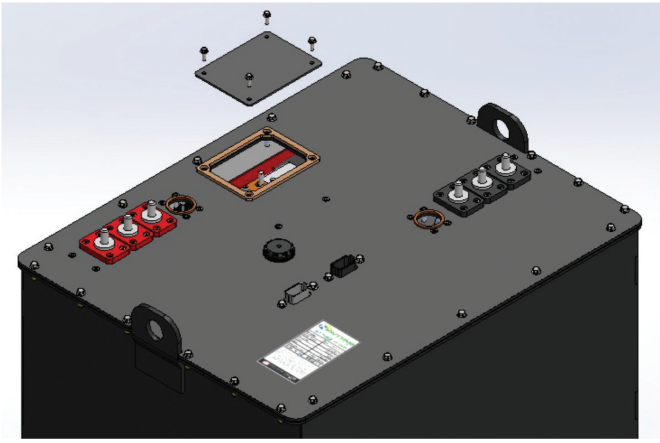

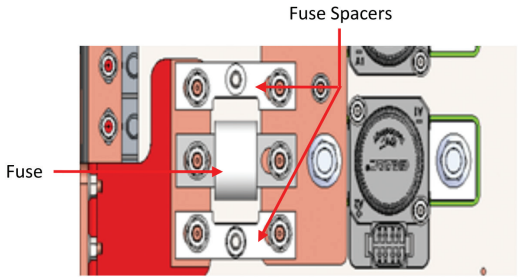

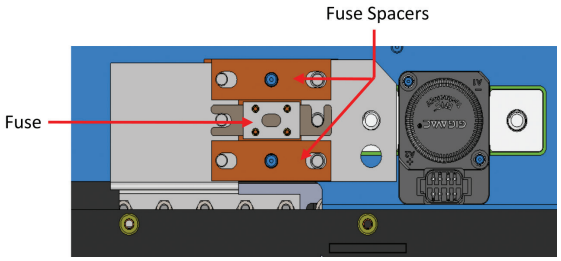

Removal of the fuse:

1. Ensure the battery is turned off.
2. Remove counterweight lid if applicable.
3. Remove the 4 fuse access door screws.
4. Remove the fuse access door. **DO NOT** drop hardware down the exposed fuse access hole.

CAUTION: This portion of the battery is always live. Take care when working or reaching into the battery.

5. Remove the 2 nuts holding the fuse in place. Take note of the location and routing of the sensor located on top of the contactor side of the fuse.
6. Pull the sensor off the stud and set it aside for easy access later.
7. Remove the fuse

Installation of the new fuse:

1. Follow removal steps in reverse.
2. Install fuse over the two exposed studs.
3. Reattach the sensor on the stud closest to the contactor.
4. Install the 2 nuts attaching the fuse to the tray and torque to spec.
5. Reinstall the fuse access door and screws and torque to spec.
6. Reinstall counterweight lid if applicable.

3.5.3 Battery Lid

Removal of the battery lid will allow access to the fuse (if not equipped with a fuse access door), battery management system (BMS), contactors and communication harness. NFPA70E personal protection equipment will be worn during this work.

CAUTION: All components below the battery lid should be considered live and care should be taken to prevent bodily injury or product damage due to electrical arcing.

NOTE: External terminal nuts, and internal busbar nuts both require a 19mm wrench to install and remove, however they have a different thread size and pitch. During service, be sure to use the proper nut to prevent damage to threads or hardware seizing in place. Partial hand thread these nuts before using tools to bring to final torque.

Removal of the battery lid:

1. Ensure the battery is turned off.
2. Remove counterweight lid if applicable.
3. Remove all battery power cables.
4. Disconnect the portion of the BMID cable that is connected to the CAN 2 receptacle on the battery lid.
5. Remove the 2 flexible busbar nuts within the battery through the access holes on the lid. Carefully use an insulated magnetic tool or your finger to pull the nuts out of the access holes.
6. Remove the 4 bolts that secure the two CAN connectors (Gray & Black) to the battery lid. Allow the connectors to fall inside the battery.
7. Remove the bolts around the perimeter of the battery lid.
8. Cut the warranty seals located on edges of the battery lid.
9. Remove the battery lid by first lifting straight up then away to clear the flexible busbars on the contactor studs.

NOTE: Do not leave the battery in this state unattended. Reinstall the lid or put a nonconductive cover over the top to prevent arcing risk from foreign objects falling into the battery before leaving.

Installation of the battery lid:

1. Reinstall the lid by first ensure proper alignment of the fuse access door on the battery lid over the fuse area inside the battery.
2. Lower the narrow side of the lid closest to the positive terminals first and allow it to rest on the battery case while continuing to hold the opposite side up.
3. While holding the opposite side of the lid up, place the gray CAN communication receptacle into the far hole in the lid making sure the keyed slots are away from the positive terminal. Use the two of the shorter M6 screws and finger tighten them to hold the connector in place.
4. Install the black CAN receptacle into the other hole in the lid. Install the remaining 2 short M6 screws, finger tight, to hold the connector in place to the battery lid.

5. While continue to hold the lid up, route the loose communication harness ring terminals up through the access holes in the lid. These will be installed in a future step.
6. Slowly lower the lid while guiding the flexible busbar on to the contactor stud. The positive side will go on first, followed by the negative one. You may need to move the busbar with your finger, through the access hole, to ensure proper alignment.

NOTE: Ensure wires going to the contactors have not been pinched between the top of the contactor and the bottom of the battery lid.

7. Using your finger or an insulated tool, place the communication wire ring terminals back over the contactor studs.

NOTE: Ring terminals must go on top of the flexible busbar, NOT between the contactor and busbar.

8. Place 1 flange nut onto each contactor stud and hand thread but do not fully tighten.
9. Reinstall all bolts around the perimeter of the lid. Torque to spec.
10. Torque the bolts holding the communication connectors to the battery lid.
11. Torque the flexible busbar nuts to spec.
12. Apply 2 new warranty seals, 1 at each narrow end of the battery. They should overlap the lip of the lid and onto the battery case.
13. Reattach battery cables, brackets, and terminal covers.
14. Reinstall the counterweight lid.

3.5.4 Battery Management System (BMS)

The BMS is a computer within the battery that monitors performance and safety through signals sent by multiple sensors.

Removal of BMS:

1. Remove the counterweight lid, battery cables, and the battery to gain access to the BMS.

CAUTION: All components below the battery lid should be considered live and care should be taken to prevent bodily injury or product damage due to electrical arcing.

2. Disconnect the sense harness connector from the BMS. To do this, first slide the red locking tab forward. Then, while pressing on the black locking tab, lift the black retention handle and swing it all the way forward. It is now safe to pull the connector away from the BMS and set out of the way.

CAUTION: You must remove the sense harness connector before removing the communication harness connector. Failure to do so may result in damage to the BMS

3. Remove the communication (comm) harness connector from the BMS in the same way the sense harness was done in the step above.
4. Cut the cable tie holding the comm harness to the BMS.
5. Remove the 2 flange nuts securing the “L” busbar to the BMS and negative contactor and the flange nut attaching the negative busbar to the BMS.
6. On batteries with the triangular negative busbar, remove the three bolts securing the busbar down to the tray below. DO NOT remove the two nuts securing the triangular busbar to the vertical busbar in the corner of the battery.
7. Remove the 4 BMS retaining nuts.
8. Remove the BMS by lifting the triangular busbar (if equipped) up slightly and out of the way. Then lift the BMS up past the mounting studs and out of the battery.

Installation of BMS:

1. Follow removal steps in reverse
2. Install BMS onto the mounting studs. On batteries equipped with a triangular negative busbar, lift the busbar up while installing the BMS.
3. Install the BMS retention nuts and torque to spec.
4. Install the 3 busbar retention bolts onto the triangular negative busbar (if equipped)
5. Install all flange nuts used to mount busbars to the BMS. Torque to spec.

CAUTION: You must connect the comm. harness connector before connecting the sense harness connector to the BMS. Failure to do so may result in damage to the BMS

6. Reattach the comm harness connector to the BMS by setting it into its receptacle and then swinging the latch handle back until the connector is fully seated. Slide the red locking tab back to prevent accidental disconnection of the connector.
7. Repeat the above step for the sense harness connector.
8. Use a cable tie to restrain the comm harness to the BMS. DO NOT over tighten the cable tie or you may damage the wires.
9. Reinstall the battery lid, cables, and counterweight lid.

NOTE: Installing a new BMS may require installing new software before the battery will function correctly. Reference the PACK ADVISOR User Manual on how to perform this task.

3.5.5 Communication (Comm) Harness

The comm harness is responsible for collecting information from the battery and delivering it to the BMS. It’s also part of the path for exterior accessories and chargers to communicate to the BMS. Disruption to this communication path may result in the battery not functioning correctly.

Removal of Communication harness:

1. Remove the counterweight lid, battery cables, and the battery lid per sections to gain access to the comm harness.

CAUTION: All components below the battery lid should be considered live and care should be taken to prevent bodily injury or product damage due to electrical arcing.

2. Disconnect the sense harness connector from the BMS. To do this, first slide the red locking tab forward. Then, while pressing on the black locking tab, lift the black retention handle and swing it all the way forward. It is now safe to pull the connector away from the BMS.

CAUTION: Before removing the comm harness, you must first disconnect the sense harness connector from the BMS.

3. Disconnect and remove the comm harness connector from the BMS in the same way the sense harness was done in the step above. Cut the cable tie holding the comm harness to the BMS (if installed).
4. Remove the flange nut holding the SYS V1 ring terminal in place on the fuse side of the positive contactor.
5. Remove the nut holding the Temperature Sensor ring terminal to the fuse.

6. Disconnect the contactor control cables by squeezing the tabs on either narrow end of the connector and lifting it up and away from the contactor. Make note of which connector goes to each contactor for reinstallation purposes.

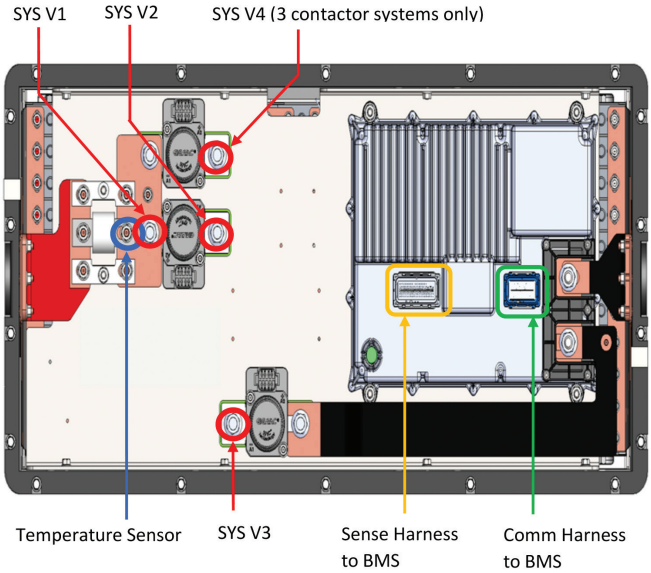

Installation of Communication harness:

1. Follow removal steps in reverse.
2. Install the Temperature Sensor ring terminal to the fuse and torque to spec.
3. Install the flange nut holding the SYS V1 ring terminal in place on the fuse side of the positive contactor bus and torque to spec.
4. Install the contactor connectors onto the proper contactor. They are keyed to only fit in one direction.
5. Reattach the comm harness connector to the BMS by setting it into its receptacle and then swinging the latch handle back until the connector is fully seated. Slide the red locking tab back to prevent accidental disconnection of the connector.
6. Install the sense harness to the BMS the same way the comm harness was in the step above.
7. Use a cable tie to restrain the harness to the BMS. DO NOT over tighten the cable tie or you may damage the wires.
8. Reinstall the battery lid, cables, and counterweight lid.

3.5.6 Contactors

Deka Ready Power batteries are equipped with two or more contactors which are controlled by the BMS. Contactors open and close during shutdown to prevent the flow of current to or from of the battery.

Removal of contactor(s):

1. Remove the counterweight lid, battery cables, and the battery lid to gain access to the contactors.

CAUTION: All components below the battery lid should be considered live and care should be taken to prevent bodily injury or product damage due to electrical arcing.

2. Disconnect the contactor communication cable connector by pressing in on the tabs located on each narrow end then lifting the connector up and away from the contactor. DO NOT pull on the wires.
3. Remove any attached busbars or comm harness ring terminals by removing the large flange nuts on each side of the contactor.
4. Remove the two contactor mounting nuts.
5. Pull the contactor up and off the mounting studs.

Installation of contactors:

1. Follow removal steps in reverse.
2. Install contactor over mounting studs. The communication receptacle faces towards the outside of the battery case.
3. Install contactor mounting nuts and torque to spec.
4. Install busbars and comm harness ring terminals. Install and torque large flange nuts to spec.
5. Install contactor communication connection into the corresponding receptacle. The connector is keyed to only fit in one direction.
6. Reinstall the battery lid, cables, and counterweight lid.

4: TROUBLESHOOTING

4.1 Overview

This section covers the processes, tools and methodologies to successfully troubleshoot the Deka Ready Power battery. Once the problem area has been pinpointed, reference the Service section of this manual for direction on removal and replacement of the needed parts.

4.2 Troubleshooting Methodology

When troubleshooting a problem within a fork truck system, it is best to start by narrowing down which section of the system is causing the issue. Depending on the symptoms, this may require conducting tests to isolate the truck from the battery, or the battery from the charger. Once the faulty section has been isolated, further testing can pinpoint the exact part needing to be repaired or replaced.

The Deka Ready Power battery product line is equipped with an onboard Battery Management System (BMS), which will perform self-diagnostics throughout operation. When the BMS detects a failure, it will generate Diagnostic Trouble Codes (DTC's) to assist with troubleshooting efforts. Use the separate document "DTC Troubleshooting Guide" to review a library of DTCs, their meanings, and troubleshooting tasks to follow for each code.

4.3 Troubleshooting Chart

Battery Will Not Power On	**UIM/BDI Cable Disconnected or Damaged**
	1. Inspect/Reinstall/Replace cable.
	2. Swap cable with Known good cable to test.
	UIM/BDI Damaged/Not functional
	1. Inspect/Replace Unit.
	2. Isolate the UIM/BDI by jumping the wake pins on CAN 1 with a jumper across pins 7&8.
	3. Swap UIM or BDI with a known good one to test.
	Battery at low SOC (state of charge)
	1. Check that the battery is able to connect to the charger.
	2. If not/start troubleshooting why the charger and battery cannot connect in the next section of troubleshooting tips.
	3. If it can connect, charge the battery.
	HYG Cable Disconnected or Damaged
	1. Inspect/Reinstall/Replace Cable.
	2. Swap cable with a known functioning cable to compare
	Active fault causing shutdowns
	1. Connect with Pack Advisor and review the DTC's (Diagnostic Trouble Codes) being generated to understand what could be causing the shutdowns and follow up by testing and troubleshooting where the codes are generated from.
	Crown Forklift Truck Variants
	1. Verify the voltage transmitted from the truck harness for its' safety feedback by verifying that the trouble codes do not display an EWS_low, or EWS_hi fault.
	2. Inspect/Repair/Replace feedback harness.
Battery Does Not Charge	**Battery not communicating with charger**
	1. With a CAN enabled charger, verify that the Baud Rate matches what the baud rate of the battery. This is verified by looking at the software and configuration settings to find out what the battery is set for, and the charger communications settings to make sure they are the same rate.
	2. Try plugging the battery into a different charger.
	3. With Pack Advisor, verify whether or not the battery sees the pilot from the charger by viewing if it switches to charge mode when the charger is plugged into the battery.
	4. Verify that the battery is configured correctly for that charger, and that both the software of the battery and charger are the newest version or correct for the application.
	5. Check the communications path between the Charger and Battery. IE: Charger cables, battery cables, BMID cable, and communication harness.
	6. Isolate the charger by jumping the wake lines on CAN 2, on top of the battery
	Possible charger malfunction
	1. Inspect charger/power cycle charger
	2. If there is another battery there, see if the issue continues when you plug it into another unit.
	3. Check charger for pilot voltage, and whether the CAN card is transmitting correctly.
	Active Fault Causing Battery Shutdown
	1. Review DTC's and make corrective actions
	BMS Unresponsive
	1. Perform BMS reset
Battery Powers Off When Not Commanded	**Active fault causing shutdowns**
	1. Review the DTC's being generated and make corrective actions
	Communication path between truck and battery may be disconnected or damaged
	1. Inspect/reinstall/replace battery to truck harnesses
	2. If it is on the truck side, notify truck dealer so they can dispatch a technician to repair.
	Erroneous sensor errors causing battery shutdown
	1. Using Pack Advisor, view the voltages and temperatures in the data tables for a rapid rise or drop.
	2. Use Pack Advisor to take a data log recording, to send to Navitas field service for evaluation.
	3. If possible, connect the battery to a different truck, to isolate if it is the truck itself causing the issues.

4.3 Troubleshooting Chart *continued*

Truck Will Not Power On	**Battery is powered off**
	1. Verify DC voltage at cable ends
	2. Power Battery on through UIM/BDI, or CAN 1 cable
	3. Refer to troubleshooting chart about battery won't power on
	Truck power cable disconnected/damaged
	1. Inspect/reinstall/replace cables
	Truck e-stop is engaged
	1. Locate the e-stop and disengage it. This is a truck component/feature so the truck dealer might have to be present.
UIM/BDI Will Not Power On	**UIM/BDI cable disconnected damaged**
	1. Inspect/reinstall/replace cable
	Battery won't power on
	1. Refer to troubleshooting chart "Battery won't power on"
	UIM screen not functioning correctly
	1. Verify whether or not the battery can power on by isolating it from the unit, and jumping the wake pins.
	2. Test UIM on a different battery
	3. Test the battery with a different UIM if able.

4.4 Pack Advisor Service Tool

Pack Advisor is a PC based service tool that when connected to a Deka Ready Power battery, can provide performance, operation, and diagnostic information. Pack Advisor also provides the ability to update battery software and configuration.

The following sections will describe basic use of Pack Advisor to assist in troubleshooting. For more detail on the installation and full use of Pack Advisor, reference the separate “Pack Advisor User Manual” document.

4.4.1 Connecting to the Battery

1. Open the counterweight access door (if equipped) to access the communication receptacles on the battery lid.
2. Power down the battery. If the battery must remain powered on for troubleshooting purposes, expect to see a DTC generated when conducting the next step. This will not damage the battery but will be a nuisance code.
3. Disconnect the CAN 2 (gray) connector from the receptacle on the battery lid and install the PCAN harness into the CAN 2 receptacle. The harness will be installed between the CAN 2 receptacle and the connector that was just removed.
4. Power the battery on
5. Connect the PCAN harness to the PCAN dongle than connect the dongle to your PC via and available USB receptacle.
6. Open Pack Advisor, choose “PEAK-System Technik GmbH: PCANPT32” and wait for the active signal to appear in the lower left corner. This may only need to be selected the first time you open a new version of Pack Advisor
7. Press scan at the lower right corner to connect to the battery.

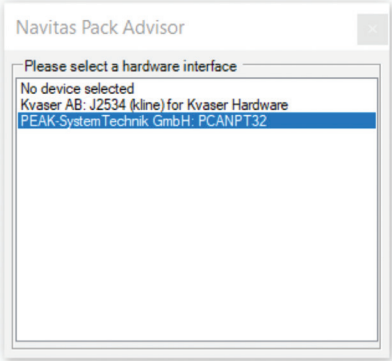

4.4.2 Pack Advisor Dashboard

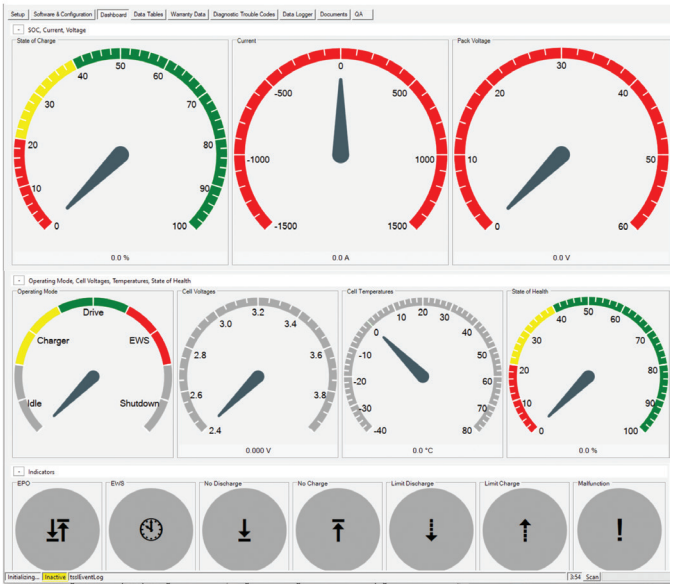

The “Dashboard” is the default tab when you first start Pack Advisor and gives basic information about the state of the battery. Reference the “Pack Advisor User Manual” for more information about the Dashboard and the other tabs in Pack Advisor. A brief description of a few of the more useful parts of the Dashboard are below.

The “State of Charge” dial can help confirm if the battery has enough charge to remain powered on and that it matches any other discharge indicators equipped (UIM / BDI / integrated truck).

The “Current” dial shows the real time number of amps going in or out of the battery as well as the limits the battery has set for both charge and discharge current. Exceeding these limits may cause the battery to shut down.

The “Operation Mode” dial indicates if the battery is ready to power the fork truck, connected to a charger, or shutting down. This is useful when diagnosing charging issues, as a failure to go into charger mode when connected to a charger will indicate a potential communication issue between battery and charger.

4.4.3 Viewing Diagnostic Trouble Codes (DTCs)

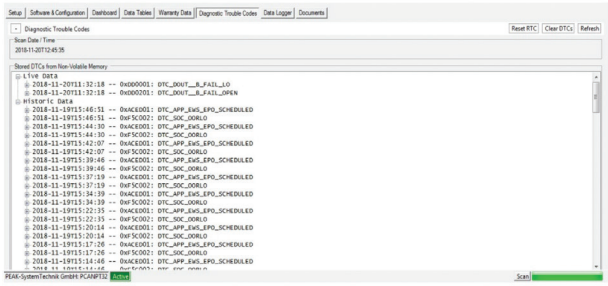

DTCs are available for viewing in the “Diagnostic Trouble Codes” tab of Pack Advisor. Live or current codes as well as historical codes are shown to aid in troubleshooting. Live codes are recorded as historical once the battery has been power cycled. All codes are time stamped using the batteries internal clock with both dates and times of when the DTC was triggered. Use these timestamps to be sure you are reviewing the more recent DTCs when beginning troubleshooting a new issue.

Historical DTCs will only be available after pressing the scan button at the bottom right corner of Pack Advisor. You will need to do this every time a Pack Advisor is opened or connected to a new battery. The green progress bar shows the state of the scan. Fully filled bar indicates the scan is complete.

It is important when using the DTC list to focus in on the correct DTCs and not older or less helpful codes. Below is an example of a DTC list from a battery. When viewing the historical section, look for DTC groups (highlighted in blue in this example). These are codes that all occurred near the same time and would have caused a battery shutdown. The codes at the beginning of this group are more useful than those at the end.

To begin to diagnose the root cause, you must find the initial or first DTC of the group. This is usually the most helpful code, as it will trigger at the beginning of the fault and/or shutdown. Use the timestamps to find the first code of the group (highlighted in red in this example). This should be the first code used for troubleshooting.

Reference the "DTC Troubleshooting Guide" document for troubleshooting tasks for each DTC

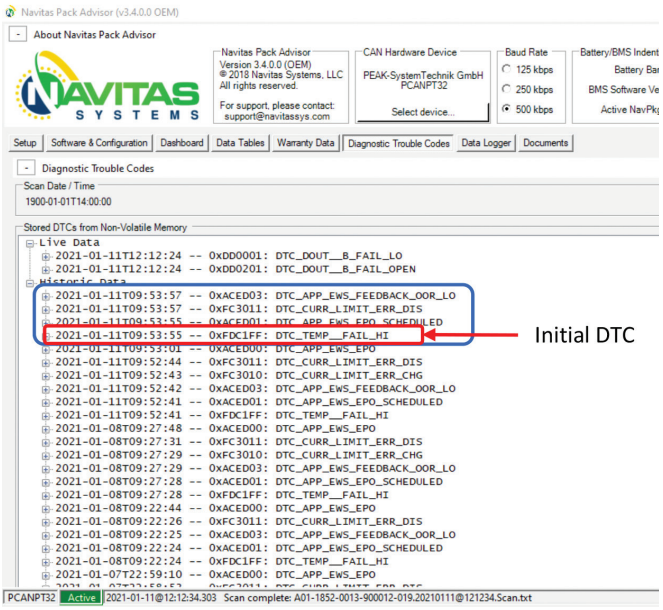

4.5 Specific Troubleshooting Tasks

This section will expand upon the tasks called out in the "Troubleshooting Chart" (in the sections above) and the separate document, "DTC Troubleshooting Guide". Use the following tasks along with the instructions in the "Service" section to perform required testing and validation tasks.

4.5.1 Isolating the User Interface by Jumping the CAN 1 Wake Line

If a suspected fault with the user interface device (UIM or BDI) is preventing the battery from powering on, it can be bypassed to investigate.

1. Ensure the battery is not currently connected to a charger.
2. Locate the CAN 1 (black) receptacle on the battery lid and remove the user interface connector if currently plugged in.
3. Using the figure as reference, identify pins 7 & 8 in the receptacle.
4. Place a jumper between these pins, being carefully not to touch any other pins.
5. If the battery is functioning properly, the contactors should close once the short is made and maintained, turning the battery on. If the short is removed, the battery will go into shutdown mode. The contactors will open after an internal countdown. (Some configurations require the short to be removed and then reapplied to shut the battery down).

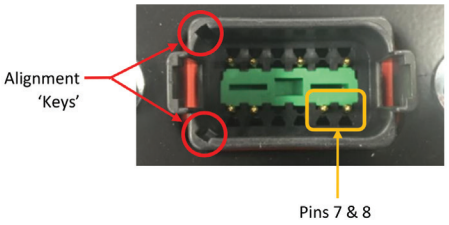

4.5.2 Isolating the Charger Pilot Signal by Jumping the CAN 2 Wake Line

Chargers with communication require a pilot signal to initiate the charging operation. This signal is also used to wake the battery if it was previously powered off. Follow the steps below if the battery is not waking when connected to the charger to isolate the problem.

1. Ensure the battery is turned off at the user interface.
2. Locate the CAN 2 (gray) receptacle on the battery lid and remove the connector if currently connected.
3. Using the figure as reference, identify pins 7 & 8 in the CAN 2 receptacle.
4. Place a jumper between these pins, being carefully not to touch any other pins.
5. If the battery is functioning properly, the contactors will close once the short is made and maintained, turning the battery on. If the short is removed, the battery will go into shutdown mode. The contactors will open after an internal countdown.

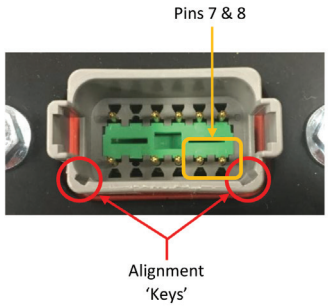

4.5.3 Troubleshooting Charger Communication Path

The communication path from the charger to the Battery Management System (BMS) is responsible for initiating the charging operation, maintaining proper charge current and stopping the current at top of charge. A break in this path may prevent any of these processes from working properly.

The communication path consists of:

- Charger
- Charger Cable(s)
- Battery Cable(s)

- BMID Y Harness (if equipped)
- BMID to CAN Harness (if equipped)
- Battery Monitor Identification Module (BMID)
- BMID Harness
- Communication Harness
- Battery Management System (BMS)

Using a multimeter and applicable schematic, check for correct pin locations and continuity between pins on any harnesses in question.

4.5.4 Resetting an Unresponsive BMS

If you find that the BMS won't start when commanded and won't communicate with user devices, the charger or the Pack Advisor service tool, the BMS may be stuck in an idle state and need to be reset.

The only way to reset the BMS is by disconnecting the sense harness, followed by the communication harnesses from the BMS, waiting 3 minutes and then reconnecting them.

1. Follow steps 1-3 in the BMS service section
2. Wait 3 minutes before reinstalling the connectors to the BMS.
3. The communication harness first, then the sense harness.
4. Connect to the BMS, turn the battery on, and test to verify BMS responds with no trouble codes.
5. Reassemble the lid and cabling on the top of the unit, and verify that the battery will run the truck, and charge without issue.

4.5.5 Troubleshooting UIM Truck Cable (CROWN)

Crown lift trucks require an extra cable from the User Interface Module (UIM) to communicate with the truck. A break in this communication path may cause battery shutdowns or truck error codes.

1. Use a multimeter and the applicable schematic to check for continuity and pin location in this cable.
2. If you suspect the issue may be in the truck side harness, you can isolate the UIM from the truck with a jumper. Place the jumper across pins 4 & 5 on the gray 6 pin connector of the UIM-to-truck cable to bypass the truck harness. If the battery remains on, then the problem may be in the truck side harness.

4.5.6 Measuring Battery Voltage

It may be useful to measure the battery voltage without needing to connect the Pack Advisor service tool. This could be used to verify the battery hasn't been overly discharged.

When contactors are closed (battery on):

Use a multimeter to measure for DC voltage between the positive and negative terminals on the top of the battery lid. This is a good way to tell if the contactors are closed when you expect them to be and may help trouble shoot other issues.

3 contactor batteries may have 1 positive contactor open while the other is closed. This is normal operation and may require checking for voltage at each positive terminal.

When contactors are open (battery off):

On the CAN 1 (black) communication receptacle located on the battery lid, measure across pins 7 & 8 to see battery voltage.

On the CAN 2 (gray) communication receptacle located on the battery lid, measure across pins 7 & 8 to see battery voltage.

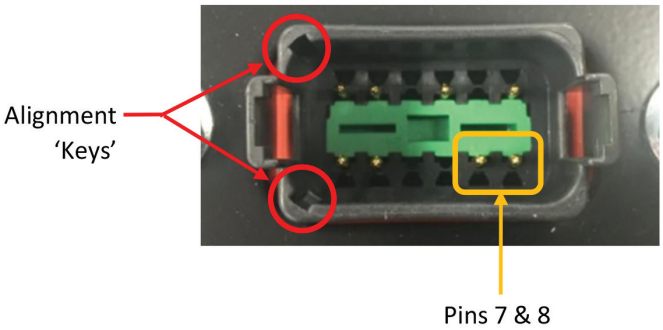

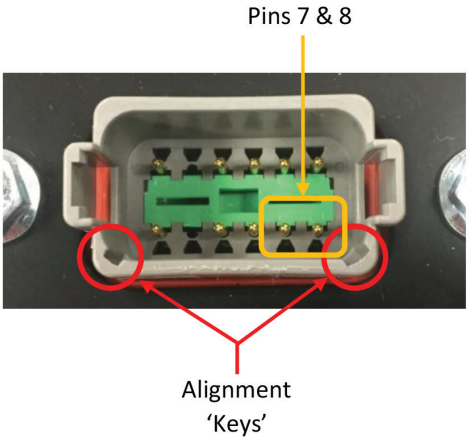

4.5.7 Verifying CAN Transmission Functionality

Verify proper CAN transmission out from the battery is helpful when troubleshooting charging or integrated truck communication issues. The first test requires the battery to be powered off, wile the second requires the battery to be on.

When contactors are open – Battery is off:

Locate pins 1 & 12 on the CAN 1 (black) communication receptacle on the battery lid. Set a multimeter to resistance and measure across pins 1 & 12. Proper operation should read roughly 120 ohms.

HYG Auto-Guided Vehicles (AGVs) may have a different resistance. Check with your regional product support engineer for assistance.

For batteries equipped with a 1.4 version BMS, charging CAN communication is transmitted through the CAN 2 (gray) communication receptacle located on the battery lid. Set a multimeter to resistance and measure across pins 1 & 12. Proper operation should read roughly 120 ohms.

When contactors are closed – Battery is on:

Locate pins 1 & 12 on the CAN 1 (black) communication receptacle on the battery lid. Set a multimeter to DC voltage and measure across pins 1 &12. Now set the multimeter to AC voltage and remeasure. Proper readings will be approximately 1.5 VDC, and .8 VAC.

For batteries equipped with a 1.4 version BMS, charging CAN communication is transmitted through the CAN 2 (gray) communication receptacle located on the battery lid. Set a multimeter to DC voltage and measure across pins 1 &12. Now set the multimeter to AC voltage and remeasure. Proper readings will be approximately 1.5 VDC, and .8 VAC.

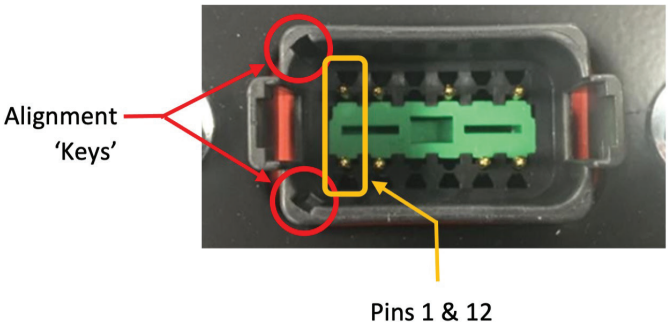

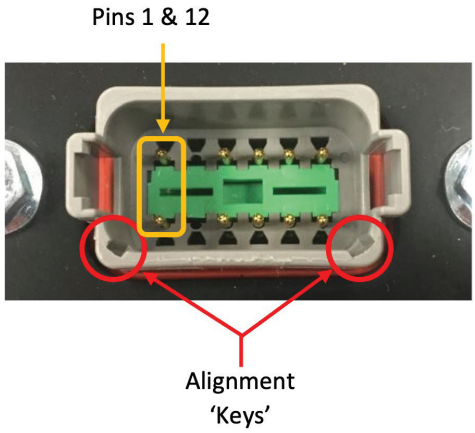

5: APPENDIX

5.1 Supporting Documents

1. “Deka Ready Power User Manual”
2. “Pack Advisor User Manual”
3. “DTC Troubleshooting Guide”

Sales Hotline: 610-682-3260 e-mail: motivepowersales@dekabatteries.com

East Penn Manufacturing Co. Lyon Station, PA 19536-0147 Phone: 610-682-6361 Fax: 610-682-4781 **www.dekabatteries.com**

E.P.M. Form No. 2708 08/23